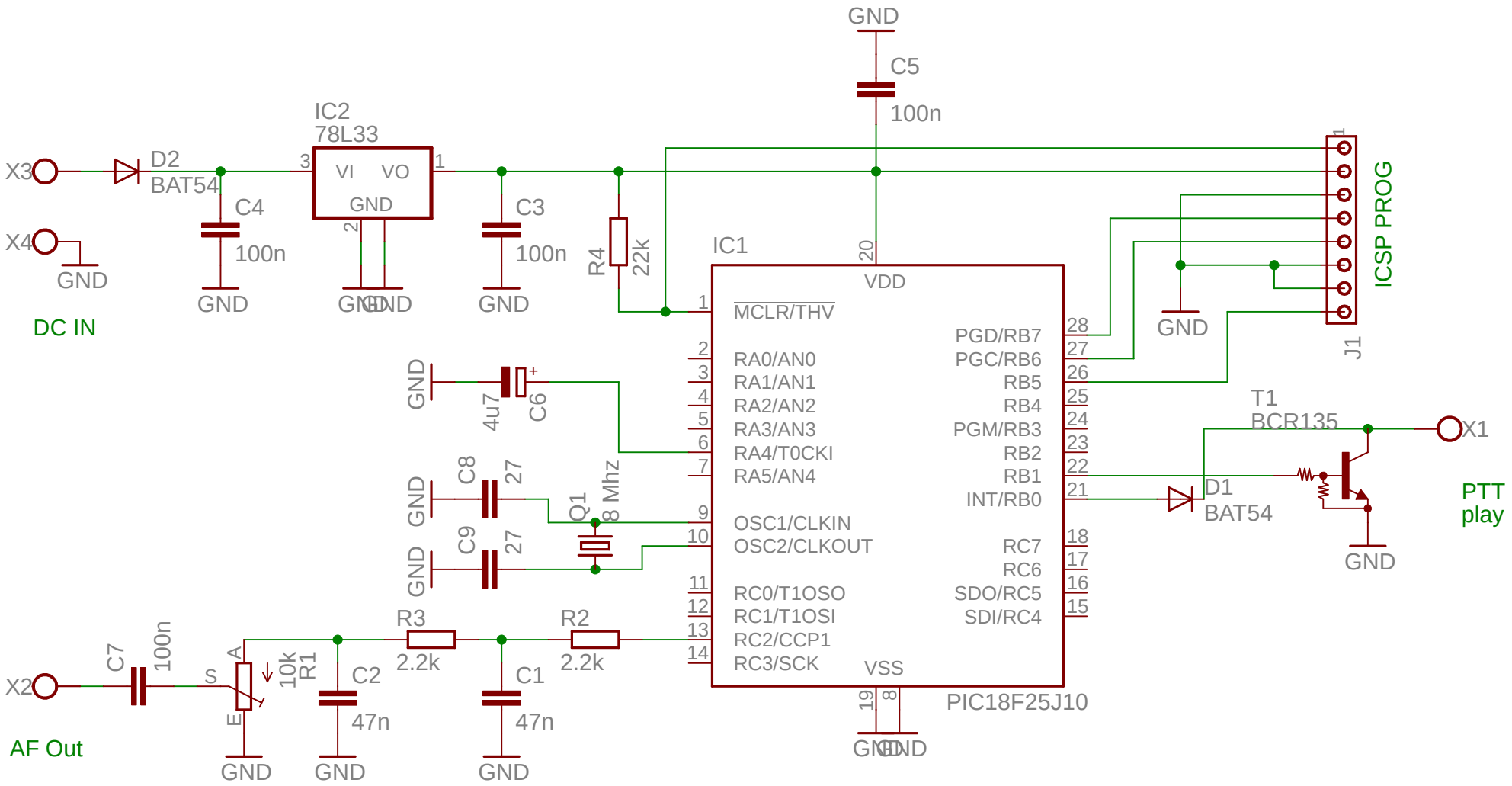

6/4/2009 2:03:46 PM f=1.60 D:\EAGLE-5.1.0\Ring_Tone.sch (Sheet: 1/1)